Anjuman-I-Islam's

M. H. SABOO SIDDIK POLYTECHNIC (AIDED)

8, Saboo Siddik Polytechnic Road, Byculla, Mumbai- 400 008

(Unit: Full Time Diploma)

A PROJECT REPORT ON

SPEED CONTROL OF A DC MOTOR USING ARDUINO PULSE WIDTH MODULATION TECHNIQUE WITH IGBT CHOPPER CIRCUIT

(an industry based group project)

Submitted by

Simran Correia (15206)

Jadhav Sanket Suresh (15210)

Joshi Umesh Yadneshwar (15213)

Khan Ashfaque Hamid Hussain (15216)

Under Guidance of

Prof. (Mrs.) KALAIVANI MUTHUVELAN

Mr. ARJUN LAD

ELECTRICAL DEPARTMENT

MAHARASHTRA STATE BARD OF TECHNICAL EDUCATION

(2017-2018)

Anjuman-I-Islam's

M. H. SABOO SIDDIK POLYTECHNIC (AIDED)

8, Saboo Siddik Polytechnic Road, Byculla, Mumbai- 400 008

This is to certify that,

1. **Simran Correia (15206)**
2. **Jadhav Sanket Suresh (15210)**
3. **Joshi Umesh Yadneshwar (15213)**
4. **Khan Ashfaque Hamid Hussain (15216)**

of sixth semester Diploma in Electrical Engineering have successfully completed the project report entitled "**SPEED CONTROL OF DC MOTOR**" in partial fulfilment of the requirements for the award of the Diploma in Electrical Engineering and submitted to the Department of Electrical Engineering of the institution, during a period for the academic year 2017-18 as per curriculum.

Name of Guide (**Mr. Arjun Lad**) Name of HOD (**Mrs. M.K. VANI**)

External Examiner Principal (**DR.A.K.KURESHI)**

SILICON CONTROL SYSTEM

MFG. OF BATTERY CHARGER/ DISCHARGER, DC DRIVES, MCC, PDB, SMPS, PLC PANEL, ARC FURNACE CONTROL, LRF

Add: C-101, Suvidhi Darshan Co. Op. Hsg. Soc. Namdeo Patil Wadi, Gograsswadi, Dombivali (E) 421201

Mobile No: 9820842180/9967170576, Email ID: shedgedilip@yahoo.co.in

---

Ref: **Date:**

TO WHOMSOEVER IT MAY CONCERN

This is to certify that Mrs. **Simran Correia**, Mr. **Sanket Suresh Jadhav**, Mr. **Umesh Yadneshwar Joshi**, Mr. **Ashfaque Hamid Hussain Khan** a final year students of M. H. Saboo Siddhik Polytechnic, Mumbai has successfully completed the project work on **SPEED CONTROL OF DC MOTOR** in **SILICON CONTROL SYSTEM, Dombivali** for the period from 1st January 2018 to 11th march, 2018 under the guidance of Mr. Arjun lad.

Project coordinator

Mr. Arjun Lad

SILICON CONTROL SYSTEM

MFG. OF BATTERY CHARGER/ DISCHARGER, DC DRIVES, MCC, PDB, SMPS, PLC PANEL, ARC FURNACE CONTROL, LRF

Add: C-101, Suvidhi Darshan Co. Op. Hsg. Soc. Namdeo Patil Wadi, Gograsswadi, Dombivali (E) 421201

Mobile No: 9820842180/9967170576, Email ID: shedgedilip@yahoo.co.in

---

Ref: **Date:**

TO WHOMSOEVER IT MAY CONCERN

This is to certify that Mrs. **SIMRAN CORREIA** a final year student of M. H. Saboo Siddhik Polytechnic, Mumbai has successfully completed the project work on **SPEED CONTROL OF DC MOTOR** in **SILICON CONTROL SYSTEM, Dombivali** for the period from 1st January 2018 to 11th march, 2018 under the guidance of Mr. Arjun lad.

Project coordinator

Mr. Arjun Lad

SILICON CONTROL SYSTEM

MFG. OF BATTERY CHARGER/ DISCHARGER, DC DRIVES, MCC, PDB, SMPS,

PLC PANEL, ARC FURNACE CONTROL, LRF

Add: C-101, Suvidhi Darshan Co. Op. Hsg. Soc. Namdeo Patil Wadi, Gograsswadi, Dombivali (E) 421201

Mobile No: 9820842180/9967170576, Email ID: shedgedilip@yahoo.co.in

---

Ref: **Date:**

TO WHOMSOEVER IT MAY CONCERN

This is to certify Mr. **SANKET SURESH JADHAV** a final year student of M. H. Saboo Siddhik Polytechnic, Mumbai has successfully completed the project work on **SPEED CONTROL OF DC MOTOR** in **SILICON CONTROL SYSTEM, Dombivali** for the period from 1st January, 2018 to 11th march, 2018 under the guidance of Mr. Arjun lad.

Project coordinator

Mr. Arjun Lad

SILICON CONTROL SYSTEM

MFG. OF BATTERY CHARGER/ DISCHARGER, DC DRIVES, MCC, PDB, SMPS,

PLC PANEL, ARC FURNACE CONTROL, LRF

Add: C-101, Suvidhi Darshan Co. Op. Hsg. Soc. Namdeo Patil Wadi, Gograsswadi, Dombivali (E) 421201

Mobile No: 9820842180/9967170576, Email ID: shedgedilip@yahoo.co.in

---

Ref: **Date:**

TO WHOMSOEVER IT MAY CONCERN

This is to certify that Mr. **UMESH YADNESHWAR JOSHI** a final year student of M. H. Saboo Siddhik Polytechnic, Mumbai has successfully completed the project work on **SPEED CONTROL OF DC MOTOR** in **SILICON CONTROL SYSTEM, Dombivali** for the period from 1st January, 2018 to 11th march, 2018 under the guidance of Mr. Arjun lad.

Project coordinator

Mr. Arjun Lad

SILICON CONTROL SYSTEM

MFG. OF BATTERY CHARGER/ DISCHARGER, DC DRIVES, MCC, PDB, SMPS,

PLC PANEL, ARC FURNACE CONTROL, LRF

Add: C-101, Suvidhi Darshan Co. Op. Hsg. Soc. Namdeo Patil Wadi, Gograsswadi, Dombivali (E) 421201

Mobile No: 9820842180/9967170576, Email ID: shedgedilip@yahoo.co.in

---

Ref: **Date:**

TO WHOMSOEVER IT MAY CONCERN

This is to certify that Mr. **ASHFAQUE HAMID HUSSAIN KHAN** a final year student of M. H. Saboo Siddhik Polytechnic, Mumbai has successfully completed the project work on **SPEED CONTROL OF DC MOTOR** in **SILICON CONTROL SYSTEM, Dombivali** for the period from 1st January, 2018 to 11th march, 2018 under the guidance of Mr. Arjun lad.

Project coordinator

Mr. Arjun Lad

ACKNOWLEDGEMENT

We take immense pleasure, thanking HOD. M.K. Vani for having permitted us and helping us and personally correcting us and providing their valuable support for successful completion of the project.

We wish to express our deep sense of gratitude to other faculty members who had directly or indirectly helped us out through different phase of the project.

Finally, yet importantly, we would like to express our heartfelt thanks to our beloved parents for their blessings and our classmates for their help and wishes for the successful completion of this project.

We would also like to convey our sincerest gratitude and indebtedness to all other faculty members and staff of Department of Electrical Engineering, who bestowed their great effort and guidance at appropriate times without which it would have been very difficult on our project work.

An assemblage of this nature could never have been attempted with our reference to and inspiration from of others whose details are mentioned in the references section. We acknowledge our indebtedness to all of them. Further, we would like to express our feeling towards our parents and God who directly or indirectly encouraged and motivated us during this dissertation.

SPECIAL THANKS

We would like to articulate our deep gratitude to our Prof. Abdul Jabbar who has always been a source of information and firm support for carrying out the project. We express our gratitude for his invaluable suggestion and constant encouragement all through the thesis work.

We would also like to express our gratitude to Mr. Lad sir who is the owner of the industry at Dombivali, where we work under him for one month. He has always been a source of motivation and information. We thank him for providing their devices for testing and other permanent work.

CONTENTS

1) **Introduction to project**
    1. Project objectives
2) **Methodology**
    1. Block diagram
    2. Introduction to speed control
    3. Principle of operation
    4. PWM strategy
    5. Advantages of PWM technique
    6. Working
    7. Specifications of material used
3) **Circuit flow**
    1. IGBT gate driver and isolation circuit
    2. IGBT snubber circuit
    3. DC chopper circuit
    4. RPM measurement circuit
4) **Software Description**
    1. About Arduino
    2. Arduino IDE
    3. Advantages of using Arduino
    4. Analog to digital converter
    5. Algorithm and process flow model
    6. Program
5) **Simulation & Experimental Results**
6) **Conclusion**
7) **Future scope**
8) **Project cost analysis**
9) **References**

INTRODUCTION TO PROJECT

INTRODUCTION

Today's industries are increasingly demanding process automation in all sectors. **Automation results into better quality**. The variable speed drives, which can control the speed of A.C/D.C motors, are indispensable controlling elements in automation systems. Depending on the applications, some of them are fixed speed and some of the variable speed drives.

The variable speed drives, till a couple of decades back, had various limitations, such as poor efficiencies, larger space, lower speeds, etc., However, the advent power electronic devices such as power MOSFETs, IGBTs etc., and also with the introduction of micro - controllers with many features, transformed the scene completely and today we have variable speed drive systems which are not only in the smaller in size but also very efficient, highly reliable and meeting all the stringent demands of various industries of modern era.

Direct currents (DC) motors have been used in variable speed drives for a long time. Speed controllers of DC motor are very useful for controlling the robotic motion and automation systems in industry. The versatile characteristics of dc motors can provide high starting torques which is required for traction drives. **Control over a wide speed range, both below and above the rated speed can be very**

easily achieved. The methods of speed control are simpler and less expensive than those of alternating current motors.

There are different techniques available for the speed control of DC motors. The phase control method is widely adopted, but has certain limitations mainly it generates harmonics on the power line and it also has got p .f when operated lower speeds. **The second method is PWM technique, which has got better advantages over the phase control**.

In the proposed project, a 5 H.P DC motors circuitry is designed, and developed using pulse with modulation (PWM). The pulse width modulation can be achieved in several ways. **In the present project, the PWM generation is done using micro- controller. Controlling the PWM duty cycle is equivalent to controlling the motor terminal voltage, which in turn adjusts directly the motor speed. Using Atmega 328 (Arduino) microcontroller generate the PWM wave for speed control of DC motor**, we need a variable-voltage DC power source to control the speed of the DC motor. When the DC motor is on, it takes certain time to reach at full speed. As soon as the power source is on, the DC motor starts gaining speed and if we switch off the power source before it reaches at rated speed, it starts to goes down. In quick succession of switching on and switching off are done, the motor rotate at a lower speed between zero and rated speed.

In order to have better speed regulation, it is required to have a feedback from the motor. The feedback can be taken either by using a tachogenerator or speed sensors or armature voltage feedback or other feedback can be used .**In present project, we implemented the feedback by using the IR sensor as the feedback signal. The infrared sensor counts the speed which are interfaced with Arduino, it give senses of occurring overload to the operator at overload condition and speed display on LCD screen.**

This project is divided in two sections First is controlling and another is showing real time parameters on LCD. Arduino is basically microcontroller which has several inputs and outputs. **The Hall Effect current sensor is connected in series with motor to measure current and temperature sensor is used to read temperature of motor**. The output of both sensors are in analog, these analog signals are read by Arduino and according to logic programmed these parameters are shown on LCD.

The chopper is a high power semiconductor device that is driven by a high frequency PWM signal. In this work, development of hardware and software of the close loop dc motor speed control system have been explained and illustrated. The desired objective is to achieve a system with the constant speed at any load condition. That means motor will run at a fixed speed instead of varying with amount of load.

When the speed of the motor is less than the predetermined value, the microcontroller increases the duty cycle until the speed reaches to the specified value. Similarly if the speed of the DC motor is higher than the predetermined value, the microcontroller reduces the duty cycle until the speed reaches to the specified value. Varying the duty cycle simply means varying the time for which the motor is switched on. The algorithm logic of this project is programmed using Arduino IDE software.

The project proposed is a real time working project, and this can be further improvised by using the other safety features, such as field current, armature current, etc.

PROJECT OBJECTIVE

1] To build a circuit that can control the output voltage which is can step down the output voltage.

2] To use IGBT as a semiconductor switch where PWM technique is applied to control the high power DC output.

3] To have control by varying potentiometer resistance to generate various duty cycle based on desired value.

4] To develop a software program using Arduino IDE (Integrated Development Environment) as per need.

5] To give protection to motor as there is no starter.

METHODOLOGY

METHODOLOGY

A scheme that address on building up such a system as described above is presented in here. As the system is based on the speed controlling of a DC motor, so the desired goal is to achieve a system with constant speed at any load condition**. That means motor will run at fixed speed at any load condition**. It will not vary with the amount of load. The software is made in such a way that even an unskilled operator can operate it. This system describes the design and implementation of the microcontroller based closed loop DC motor speed controller that controls the speed of a DC motor by using PWM and DC chopper.

In implementing this work frequency, independent PWM output with variable duty cycle that can vary from 0% to 100% is generated. Furthermore, an LCD display was fabricated to display the output; this kind of setup provides a complete user interface unit. Hence the system is complete stand-alone and user friendly. In case of sudden load drops, the speed of the motor will be very high. As a result, output voltage will be also very high. Therefore, controller unit will sense output voltage and will compare with the desired level of voltage. In case of excessive load, motor cannot run at its desired speed, and then OCR will start increasing until reaches its maximum value. After reaching the maximum value, there remains no

improvement of the speed, i.e. output voltage does not matches the desired level then microcontroller will send a message **"OVERLOAD"** using the LCD, so that the user can understand the condition and hence reduce the load of the motor. **It is a closed-loop with real time control system.**

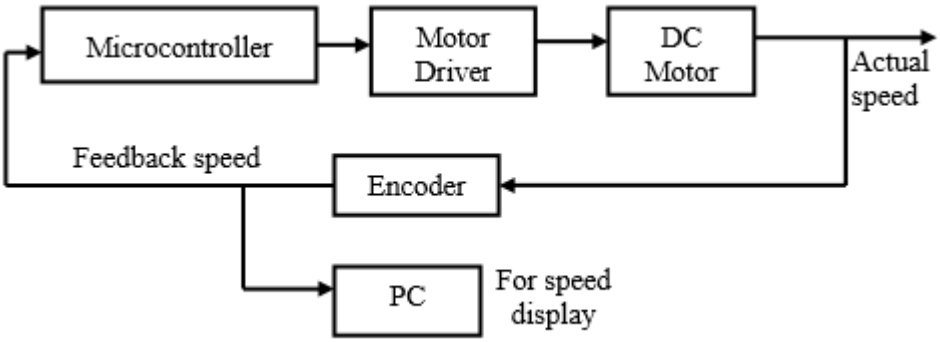

The motor to be controlled is fed by a DC source through a chopper**. In microcontroller, it will calculate the error between the desired speeds with the actual speed.** The error will determine duty cycle of pulse-width- modulation (PWM) in microcontroller. **The IR sensor senses the speed, which gives voltage as output.** And this voltage is fed to the microcontroller to drive the speed of the motor. Then, the duty cycle will send to DC motor driver either accelerate or decelerate DC motor to maintain it at desired speed. The output voltage of IR sensor is provided to the microcontroller and microcontroller determines the output voltage of the chopper fed to the DC motor for desired speed.

The project is divides into two parts that are software and hardware implementation. Each part of the project will discuss in the following section.

BLOCK DIAGRAM

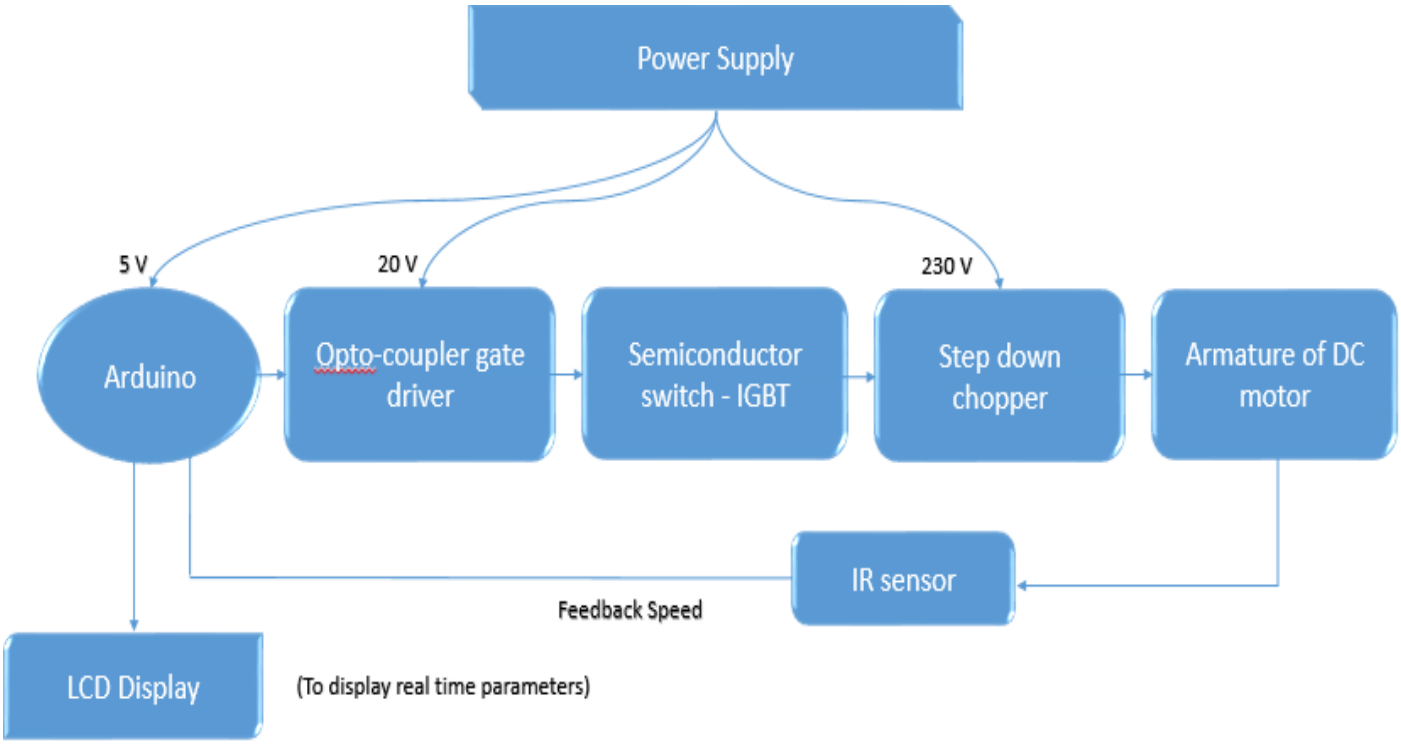

INTRODUCTION TO SPEED CONTROL

Speed control means intentional change of drive speed to a value required for performing the specific work process. This concept of speed control or adjustment should not be taken to include the natural change in speed which occurs due to change in the load on the shaft.

Any given piece of industrial equipment may have its speed change or Adjusted mechanically by means of stepped pulleys, sets of change gears, variable speed friction clutch mechanism and other mechanical devices. Historically it is proved to be the first step in transition from non-adjustable speed to adjustable speed drive. The electrical speed control has many economical as well as engineering advantages over mechanical speed control

The nature of the speed control requirement for an industrial drive depends upon its type. Some drives may require continues variation of speed for the whole of the range from zero to full speed or over a portion of this range , while the others may require two or more fixed speeds.

PRINCIPLE OF OPERATION

Pulse width modulation control works by switching supply on and off very rapidly. The DC voltage is converted to a square wave signal, alternating between fully on (nearly 230v) and zero, giving the motor a series of power "kicks”.

Pulse width modulation technique (PWM) is a technique for speed control which can overcome the problem of poor starting performance of a motor.

PWM for motor speed control works in a very similar way. Instead of supplying a varying voltage to a motor, it is supplied with a fixed voltage value (such as 230v) which starts it spinning immediately. The voltage is then removed and the motor ‘coasts’. By continuing this voltage on/off cycle with a varying duty cycle, the motor speed can be controlled. In each case, the signal has maximum and minimum voltage of 230v and 0v.

By varying the mark space ratio of the signal over the full range, it is possible to obtain any desired average output voltage from 0v to 230v. The motor will work perfectly well, provided that the frequency of the pulsed signal is set correctly, a suitable frequency being 30 Hz setting the frequency too low gives jerky operation. And setting it too high might increase the motor's impedance.

PWM STRATEGY

Pulse width modulation is a method for binary signal generation, which has 2 signal periods (high and low). The width (W) of each pulse varies between 0 and the period (T). The main principle is control of power by varying the duty cycle. Here the conduction time to the load is controlled. Let for a time t1, the input voltage appears across the load i.e. ON state and for t2 time the voltage across the load is zero.

- **The average voltage at output** is given by

$V_a = 1/T \int V_o dt = t_1/T\, V_s = f t_1 V_s = kV_s$

- **The average load current** $I_a = V_a/R = kV_s/R$

Where, T is the total time period $=t_1+t_2$, $k = t_1/T$ is the duty cycle.

- **The rms value of output voltage** is $V_o = (i/T \int V_o^2 dt)^{1/2} = k V_s$

- **The output power** and is given by $P_i = 1/T \int V_o i dt = 1/T \int V_o^2/R\, dt = kV_s^2/R$

- The duty cycle can be varied from 0 to 1 by varying t1, T or f. Therefore, the output voltage V0 can be varied from 0 to Vs by controlling k, and the power flow can be controlled.

- As time t1 changes the width of the pulse is varied and this type of control is called pulse width modulation (PWM) control.

For a better understanding of PWM, these diagrammatic representations can be used. These figures represent the waveforms obtained as output at different voltage requirements.

High Speed Signal (90%): The green part of the signal represents the ON time and the white part of it represents a time when it is not receiving any voltage.

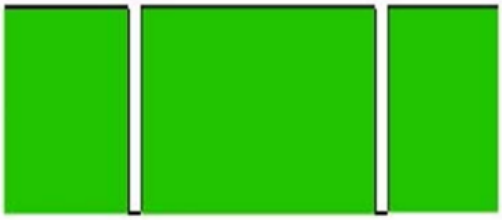

Signal with half voltage (50%):

,

Signal with low voltage (10%):

ADVANTAGES OF PWM METHOD

The main advantage of PWM is that power loss in the switching devices is very low. When a switch is off there is practically no current, and when it is on, there is almost no voltage drop across the switch. Power loss, being the product of voltage and current, is thus in both cases close to zero.

PWM works also well with digital controls, which because of their on/off nature, can easily set the needed duty cycle. Also, if you use PWM, the entire control circuit can be digital, eliminating the need for digital-to-analog converters. Using digital control lines will reduce the susceptibility of your circuit to interference. Finally, motors may be able to operate at lower speeds if you control them with PWM. When you use an analog current to control a motor, it will not produce significant torque at low speeds. The magnetic field created by the small current will be too weak to turn the rotor. On the other hand, a PWM current can create short pulses of magnetic flux at full strength, which can turn the rotor at extremely slow speeds.

The technology has become more pervasive as low-cost microcontrollers incorporate PWM control. Microcontrollers offer simple commands to vary the duty cycle and frequencies of the PWM control signal. So by getting these pulses generated by a microcontroller, we can increase the efficiency, accuracy and thus the reliability of the system.

WORKING

Pulse width modulation is implemented using a microcontroller and is dependent on the input variable voltage value from a potentiometer for generating variable pulse widths, for driving the motor at variable speed.

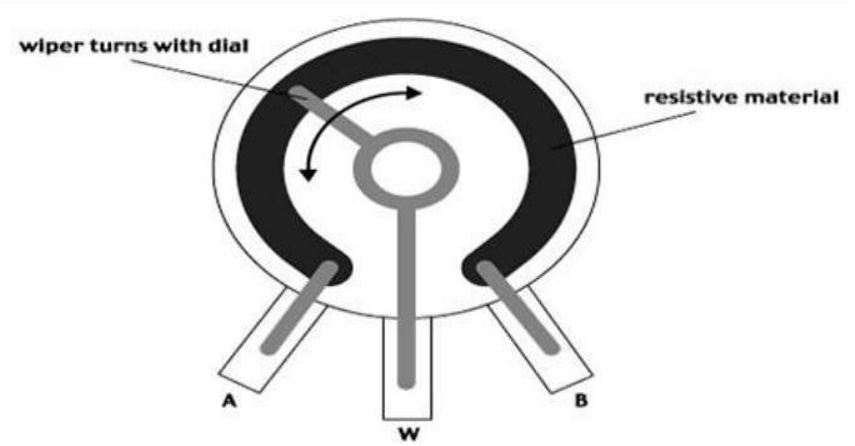

The 2 terminals of potentiometer are connected to VCC & GND, resulting in variable voltage in the range of 0-5V, in the terminal of potentiometer. This middle pin serves as the input for the microcontroller.

The program for generating results for pulse width is written into a microcontroller's memory using ISP (In-System Programmer). The variable output (between 0-5V) goes to the **Analog Input pin** of the Arduino. **The Arduino has inbuilt 10 bit ADC** (Analog to Digital Converter), which means it can convert any analog value between 0-5V to digital value of 10-bit resolution.

This 10-bit binary value gets converted into the corresponding decimal value of range 0-1023 (as 2^{10}=1024), which is responsible for

triggering the output pin of the microcontroller, for a particular time duration, which further triggers the IGBT for the same duration.

SPECIFICATIONS OF MATERIAL USED

a) Arduino circuit board

- Arduino UNO R3

b) IGBT module

- 75 Amps, 1000V (SKM75GB12T4)

c) Inductor

- 0.54mH, 20A
- Frequency: 18kHz
- Type: 43, 75mm stack
- CRGO 0.27mm thick laminations
- Turns: 7
- Copper strips: 4.1*2.05
- Current: 20 Amps

d) Capacitor (Electrolytic)

- 3300mfd/ 350V

e) Power diode (for freewheeling purpose)

- Can use second IGBT's diode from IGBT module

f) Snubber capacitor

- Non- electrolytic ceramic capacitor
- 0.01uFarad

g) Heat sink

- Pi type

h) LCD Display

- 20*4 characters

i) Ammeter

- 0 - 30 Amps

j) Voltmeter

- 0 – 300 Volts

k) Transformer

- 230/20V (for gate driver)
- 230/9V (for Arduino)

l) Voltage Regulator ICs

- 7805 (for arduino)
- 7815 (for gate driver)
- 7808 (for gate driver)

CIRCUIT FLOW

IGBT GATE DRIVER & ISOLATION CIRCUIT

Phototransistor Optocoupler

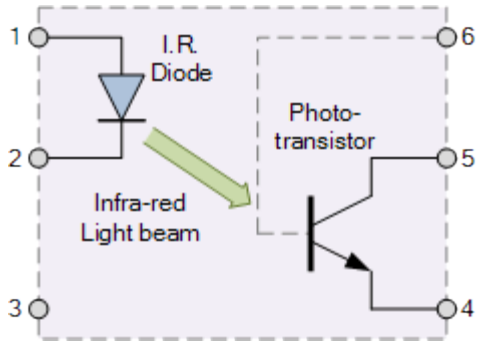

In this project we use an opto-coupler IC as gate driver. Assume a photo-transistor device as shown. Current from the source signal passes through the input LED which emits an infra-red light whose intensity is proportional to the electrical signal.

This emitted light falls upon the base of the photo-transistor, causing it to switch-ON and conduct in a similar way to a normal bipolar transistor.

The base connection of the photo-transistor can be left open (unconnected) for maximum sensitivity to the LEDs infra-red light energy or connected to ground via a suitable external high value resistor to control the switching sensitivity making it more stable and resistant to false triggering by external electrical noise or voltage transients.

When the current flowing through the LED is interrupted, the infra-red emitted light is cut-off, causing the photo-transistor to cease conducting. The photo-transistor can be used to switch current in the output circuit. The spectral response of the LED and the photo-sensitive device are closely matched being separated by a transparent medium such as glass, plastic or air. Since there is no direct electrical connection between the input and output of an optocoupler, electrical isolation up to 10kV is achieved.

Opto-couplers and opto-isolators can be used on their own, or to switch a range of other larger electronic devices such as transistors and triacs providing the required electrical isolation between a lower voltage control signal, for example one from an Arduino or micro-controller, and a much higher voltage or mains current output signal.

Common applications for opto-couplers include microprocessor input/output switching, DC and AC power control, PC communications, signal isolation and power supply regulation which suffer from current ground loops, etc. The electrical signal being transmitted can be either analogue (linear) or digital (pulses).

In this application, the opto-coupler is used to detect the operation of the switch or another type of digital input signal. This is useful if the switch or signal being detected is within an electrically noisy environment. The output can be used to operate an external circuit, light or as an input to a PC or microprocessor.

When pulse of PWM from Arduino passes through the input LED which emits an infra-red light whose intensity is proportional to the electrical signal. This emitted light falls upon the base of the photo-transistor, causing it to switch-ON and conduct in a similar way to a normal bipolar transistor. When the current flowing through the LED

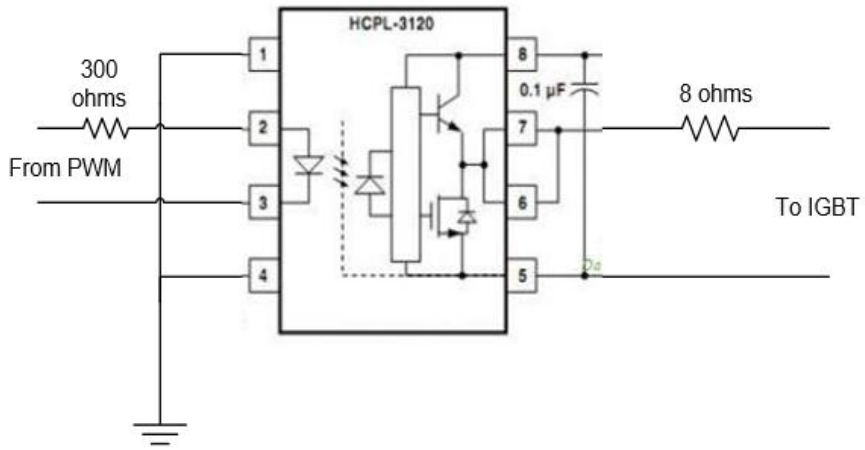

is interrupted, the infra-red emitted light is cut-off, causing the photo-transistor to cease conducting. The phototransistor can be used to switch current in the output circuit. By using this circuit we keep isolate the Arduino circuit & driver circuit. Driver circuit is used to drive the IGBT, to turn on the IGBT we require ±20 V between gate to source (rated value).

The high operating voltage range of the output stage provides the drive voltages required by gate controlled devices. The voltage and current supplied by this opto-coupler makes it ideally suited for directly driving IGBTs with rating up to 1200 v/100 A. for IGBTs with higher ratings, the HCPL-320 can be used to drive a discrete power stage which drives the IGBT gate.

IBGT SNUBBER CIRCUIT

When a power device is abruptly turned off, trapped energy in the circuit stray inductance is dissipated in the switching device, causing a voltage overshoot across the device. The magnitude of this transient voltage is proportional to the amount of stray inductance and the rate of fall or turn-off current. The situation is at its worst for fast switching IGBT modules. These devices switch at a high magnitude of currents in a short duration of time, giving rise to potentially destructive voltage transients. The di/dts produced could easily be a few thousand A/us. Proper attention needs to be paid to protect these devices from destruction.

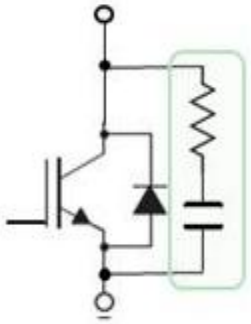

It is determined that the snubbers offer optimized protection against voltage transients during the normal turn-on and turn-off switching. Usage of such protection circuits allow faster yet safer operation by containing the operating loci within the boundaries of the rated Safe Operating Area.

In order to product IGBT from high dv/dt due to switching inductive load, a snubber circuit consists of 200 ohms, 0.01uFD and diode.

BUCK CONVERTER CIRCUIT

A chopper is a static power electronic device that converts fixed dc input voltage to a variable dc output voltage. A Chopper may be considered as dc equivalent of an ac transformer since they behave in

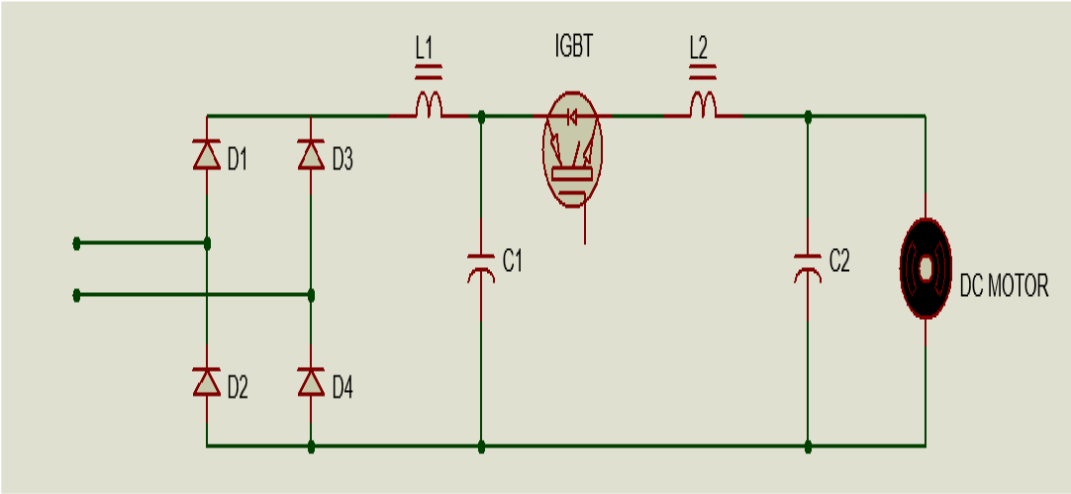

an identical manner. As chopper involves one stage conversion, these are more efficient. Chopper systems offer smooth control, high efficiency, faster response and regeneration facility.

The power semiconductor devices used for a chopper circuit can be force commutated thyristor, power BJT, MOSFET and IGBT.GTO based chopper are also used. These devices are generally represented by a switch. When the switch is off, no current can flow. Current flows through the load when switch is “on”. For the sake of simplicity, voltage drop across these devices is generally neglected. As

mentioned above, a chopper is dc equivalent to an ac transformer, have continuously variable turn's ratio. Like a transformer, a chopper can be used to step down or step up the fixed dc input voltage.

RPM MEASUREMENT CIRCUIT

In this project for feedback and displaying real time speed on LCD display Infrared sensor is used. It is kept on the moving shaft on the DC shunt motor Active infrared sensors consist of two elements: infrared source and infrared detector. Infrared sources include an LED or infrared laser diode. Infrared detectors include photodiodes or phototransistors. The energy emitted by the infrared source is reflected by an object and falls on the infrared detector.

Principle of Working

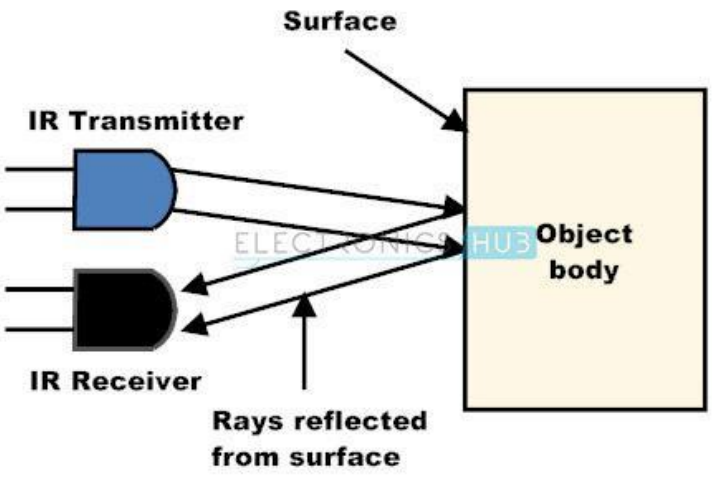

Photo diode is connected in reverse bias, inverting end of LM358 (PIN 2) is connected to the variable resistor, to adjust the

sensitivity of the sensor. And non-inverting end (PIN 3) is connected to the junction of photodiode and a resistor.

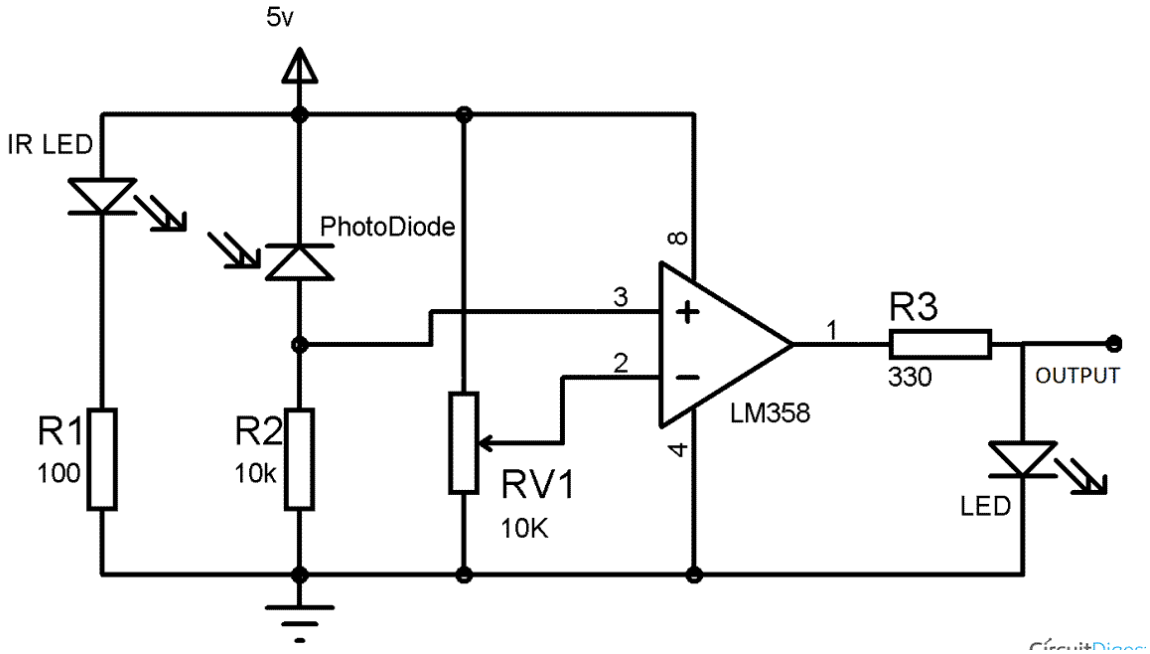

When we turn ON the circuit there is no IR radiation towards photodiode and the Output of the comparator is LOW. When we take some object (not black) in front of IR pair, then IR emitted by IR LED is reflected by the object and absorbed by the photodiode. Now when reflected IR Falls on Photodiode, the voltage across photodiode drops, and the voltage across series resistor R2 increases. When the voltage at Resistor R2 (which is connected to the non-inverting end of comparator) gets higher than the voltage at inverting end, then the output becomes HIGH and LED turns ON.

Voltage at inverting end, which is also called **Threshold Voltage**, can be set by rotating the variable resistor's knob. Higher the voltage at inverting end (-), less sensitive the sensor and Lower the voltage at inverting end (-), more sensitive the sensor.

Advantage of using IR sensor for maintaining constant speed

Suppose somehow load is increased on the motor. Which will reduce the RPM of motor. By checking real time rpm, arduino will sense that rpm has been reduced. Accordingly arduino will send signal to increase power supplied to the motor in order to compensate the reduced RPM and vice-versa. Thus a constant RPM will be managed in any condition.

FEATURES

- Sensor range extends upto 7~8 cm
- Displays Maximum RPM when left Idle
- Automatically toggles modes from "Idle" to "reading"
- Programmable and supports customization

Understanding code of RPM measurement

```
#include <LiquidCrystal.h>
LiquidCrystal lcd(8, A1, A2, A3, A4, A5);

volatile byte REV;
unsigned long int rpm, maxRPM;
unsigned long time;
int ledPin = 12;
int led = 0 , RPMlen, prevRPM;
int flag = 0;
long prevtime = 0;

void setup() {
Serial.begin(9600);
lcd.begin (20,4);
attachInterrupt(0, RPMCount, RISING);
REV = 0;
rpm = 0;
time = 0;
pinMode(ledPin, OUTPUT);
lcd.print("WELCOME TO");
lcd.setCursor(0, 1);
```

```
lcd.print("OUR PROJECT");
delay(2000);
lcd.clear();
}

void loop() {
long currtime = millis();
long idletime = currtime - prevtime;
if (REV >= 5)
{
if (flag == 0)
{
lcd.clear();
lcd.print("SENSOR MEASURING");
flag = 1;
}
rpm = 30 * 1000 / (millis() - time) * REV;
if (rpm > maxRPM)
maxRPM = rpm;
time = millis();
REV = 0;
int x = rpm;
while (x != 0) {
```

```
x = x / 10;
RPMlen++;
}
if (RPMlen != prevRPM)
{
lcd.clear();
prevRPM = RPMlen;
flag = 0;
lcd.print("SENSOR MEASURING");
}
lcd.setCursor(0, 1);
lcd.print(rpm, DEC);
lcd.setCursor(6, 1);
lcd.print("rpm");
delay(500);
prevtime = currtime;
}
if (idletime > 5000)
{
if (flag == 1)
{
lcd.clear();
flag = 0;
```

```
}
lcd.clear();
lcd.print("MAXIMUM RPM");
lcd.setCursor(0, 1);
lcd.print(maxRPM, DEC);
lcd.print("   RPM");
delay(2000);
lcd.clear();
lcd.print("IDLE STATE");
lcd.setCursor(0, 1);
lcd.print("READY TO MEASURE");
delay(2000);
prevtime = currtime;
}
}
void RPMCount()
{
REV++;
if (led == LOW)
{
led = HIGH;
}
else {
```

```
led = LOW;
}
digitalWrite(ledPin, led);
}
```

Interrupts

The code as mentioned above makes use of the Arduino Interrupts. Now as we know the Interrupts execute a set of instruction when called no matter what the Arduino was doing before. Here, Interrupts are called when the magnet passes through the detector.

We use **Interrupts** here to count the number of times the Hall sensor detects the magnet. Whenever there is a hike in Input pin the Interrupt routine (ISR function) named as “isr” is called which increment the counter value and thus makes a count.

Use of Interrupts increases the accuracy of reading as Interrupt is called every time the magnet passes and Uno counts it this is different from other methods in which the Arduino has to wait for whole code to be finished before getting back to read the Sensor reading again and if the code is large due some other reasons the reliability of the reading decreases drastically.

The Interrupts in Arduino Uno are initiated or called on either using Falling, Rising or Logic type. In our Program we have used the

Rising type Interrupt initiator; Rising type calls the Interrupt every time the detector pin detects a rise in input from LOW to HIGH.

If you are using an IR LED based sensor you can also use Falling type, in this case the Interrupt will be called every time the detector pin detects a fall in the input i.e. from HIGH to LOW.

Another thing to note is the formula for the rpm calculation; it is based on simple math and unitary method to calculate number of revolution made by the shaft-

i.e. RPM= No. of counts / Time taken to count

Time taken to count will be measured through millis function of Arduino..

Delay Function

The delay(1000) is used in the code it determine after how much time the value to be changed on your display, you can set it according to your needs.

The display device used in this tutorial is the Serial Monitor of the Arduino itself; instead of this you can also use 16*2 LCD or LED shields to display the RPM values using the respective libraries and hardware.

SOFTWARE DESCRIPTION

ABOUT ARDUINO

This project uses the Arduino Uno, which incorporates the ATmega328 microcontroller. Arduino microcontrollers are programmed using the Arduino IDE (Integrated Development Environment). Arduino is an open-source electronics prototyping platform based on flexible, easy-to-use hardware and software. It's intended for artists, designers, hobbyists, and anyone interested in creating interactive objects or environments.

This board has the following features

- ATmega 328 microcontroller
- 5V Operating Voltage
- 7-12V Input Voltage (recommended)
- 6-20V Input Voltage (limits)
- 14 Digital I/O Pins (of which 6 provide PWM output)
- 6 Analog Input Pins
- 40 mA DC Current per I/O Pin
- 50 mA DC Current for 3.3V Pin
- 2 KB (ATmega328) SRAM
- 16 MHz Clock Speed
- a USB connection
- 32kB flash program memory(0.5 KB used by bootloader)
- 1kB EEPROM
- 2kB RAM

Additional details may be found at **www.arduino.cc**

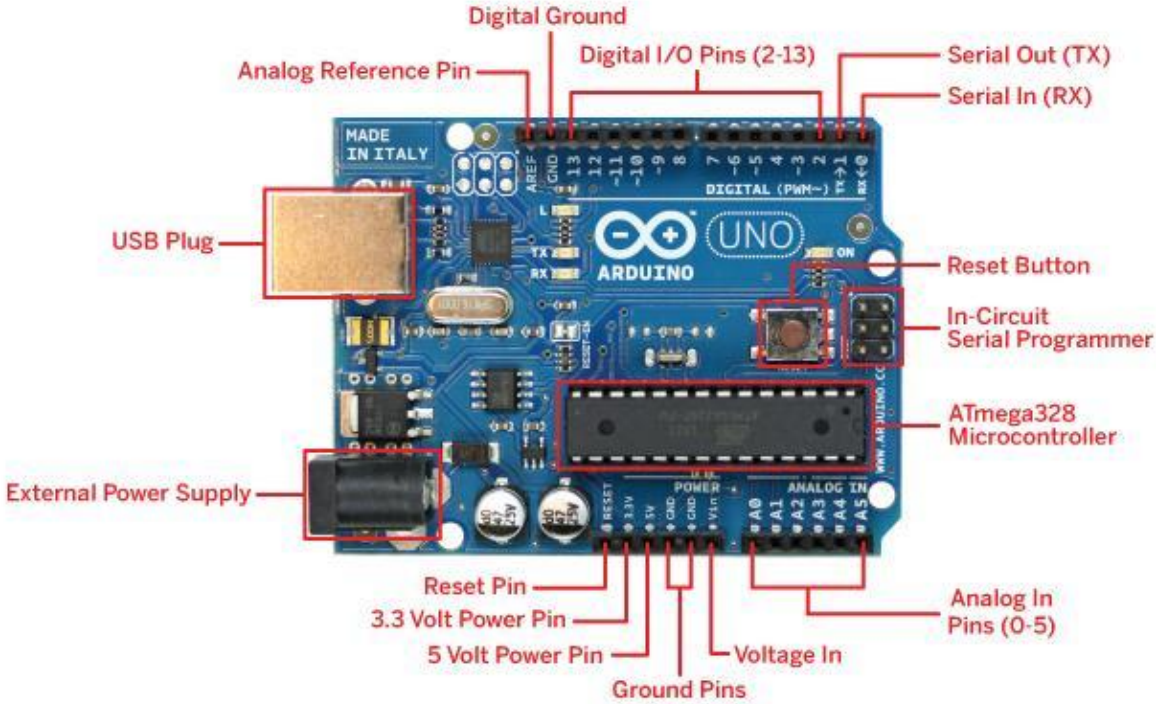

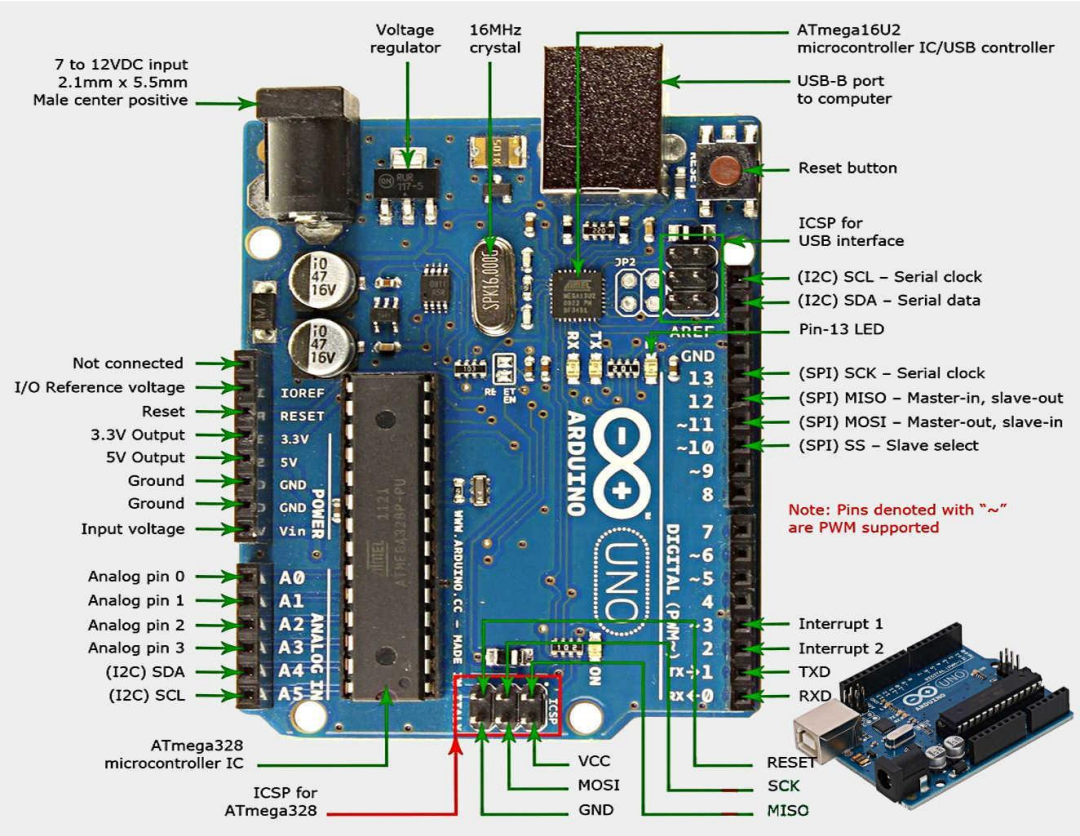

ARDUINO DEVELOPMENT ENVIRONMENT

The Arduino development environment is a software that contains:

- A text editor for writing program code, (referred to as a sketch by Arduino)
- A message area,
- A text console,
- A toolbar with buttons for common functions,
- A series of menus.

The Development Environment connects to the Arduino hardware to upload programs and communicate with them.

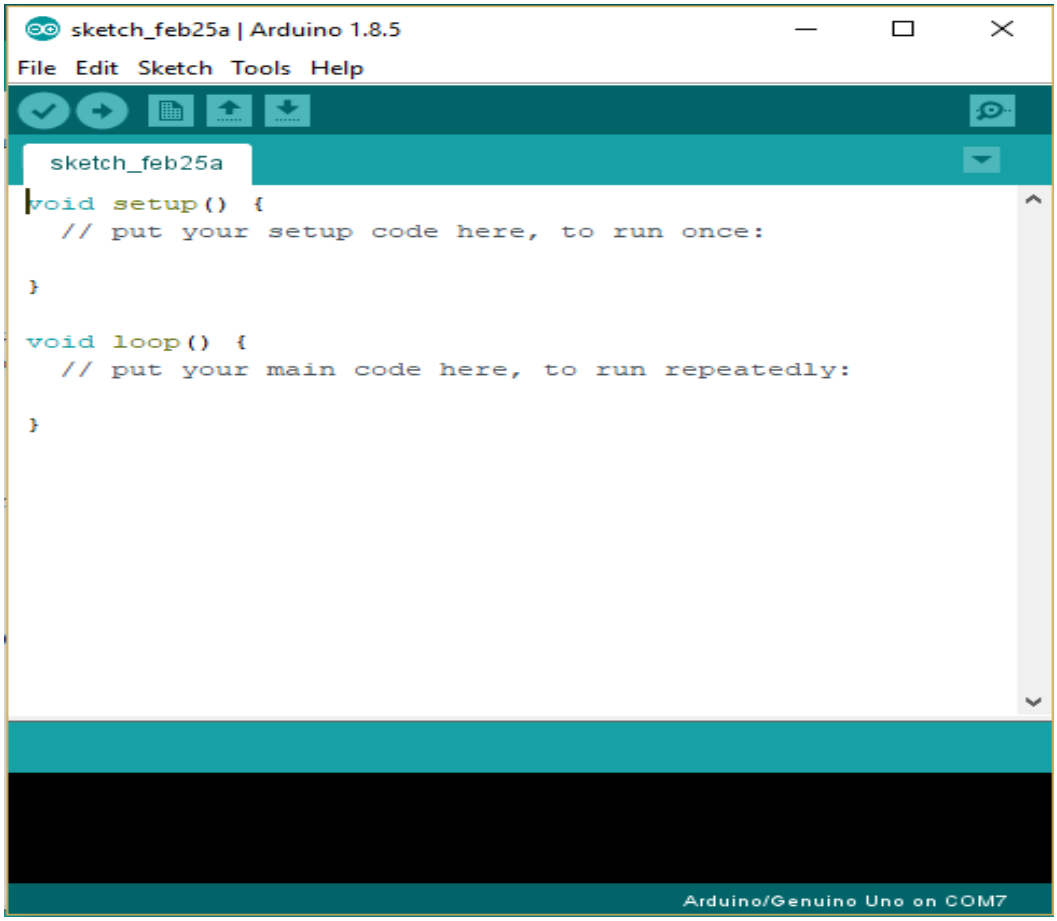

ADVANTAGES OF USING ARDUINO

Microcontrollers are widely used in today's control systems for the following reasons:

- Design and Simulation – Because we are programming with software, detailed simulations may be performed in advance to assure correctness of code and system performance.
- Flexibility – Ability to reprogram using Flash, EEPROM or EPROM allows straightforward changes in the control law used.
- High Integration – Arduino consist of single chip computers with on-chip processing, memory, I/O, peripherals for serial communication and reading analog signals.
- Cost – Cost savings come from several locations. Because so many components are included on one IC, board area and component savings are often evident as well.
- Easy to Use – Just program and go! Arduino often only require a single 5V supply as well which makes them easier to power and use.

In this method absence of rheostatic control hence power loss is negligible. By using this method we can control many motors via central Arduino. Due to Arduino we can control as well as displaying various parameters related to speed, armature current and temperature.

ANALOG TO DIGITAL CONVERSION

Microcontrollers are capable of detecting binary signals: is the button pressed or not? These are digital signals. When a microcontroller is powered from five volts, it understands zero volts (0V) as a binary 0 and a five volts (5V) as a binary 1. The world however is not so simple and likes to use shades of gray. What if the signal is 2.72V? Is that a zero or a one? We often need to measure signals that vary; these are called analog signals. A 5V analog sensor may output 0.01V or 4.99V or anything in between. Luckily, nearly all microcontrollers have a device built into them that allows us to convert these voltages into values that we can use in a program to make a decision.

What is the ADC?

An Analog to Digital Converter (ADC) is a very useful feature that converts an analog voltage on a pin to a digital number. By converting from the analog world to the digital world.

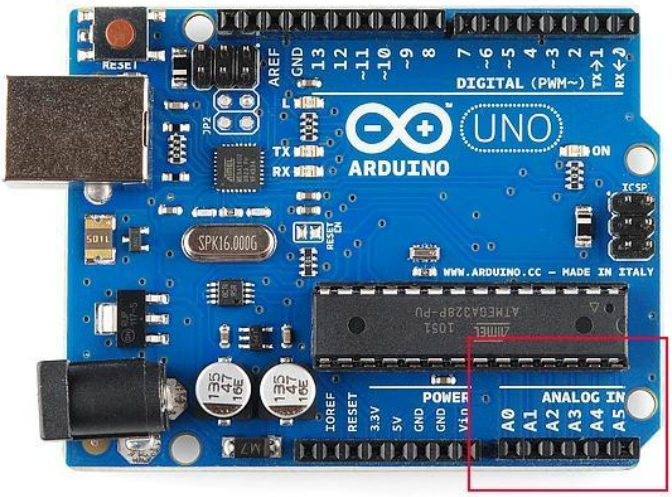

Not every pin on a microcontroller has the ability to do analog to digital conversions. On the Arduino board, these pins have an 'A' in front of their label (A0 through A5) to indicate these pins can read analog voltages.

The ADC on the Arduino is a 10-bit ADC meaning it has the ability to detect 1,024 (2^{10}) discrete analog levels. Some microcontrollers have 8-bit ADCs (2^8 = 256 discrete levels) and some have 16-bit ADCs (2^{16} = 65,536 discrete levels).

The way an ADC works is fairly complex. There are a few different ways to achieve this feat, but one of the most common technique uses the analog voltage to charge up an internal capacitor and then measure the time it takes to discharge across an internal resistor. The microcontroller monitors the number of clock cycles that pass before the capacitor is discharged. This number of cycles is the number that is returned once the ADC is complete.

ALGORITHM AND PROCESS FLOW MODEL

Microcontroller acts as brain of the whole DC motor speed control system. It will receive the desired speed from user through PC or using potentiometer or through keypad. The actual speed will be compared with the desired speed and the correction will be done by microcontroller using PID Arduino library to always maintain the DC motor speed at the set speed.

An algorithm has to be developed to make the microcontroller to read the input and respond accordingly. It should follow the instructions as per the algorithm. Therefore, the algorithm is established and represented by a flowchart in Figure. This flowchart is then translated into Arduino programming language and compiled using Arduino IDE software. The program in arduino's language can be referred below.

There are two parts of the program which are setup (only once runs) and other is loop (repeatedly runs). Setup part consists of initialization of process flow, Loop part contains PID control for calculating error between input and output and maintaining the output at the set input.

In the feedback loop of PID control, if the speed is below reference speed then the PID controller will increase the duty cycle and hence the speed. Similarly if the actual speed of the motor is above the reference speed then Arduino will decrease the duty cycle.

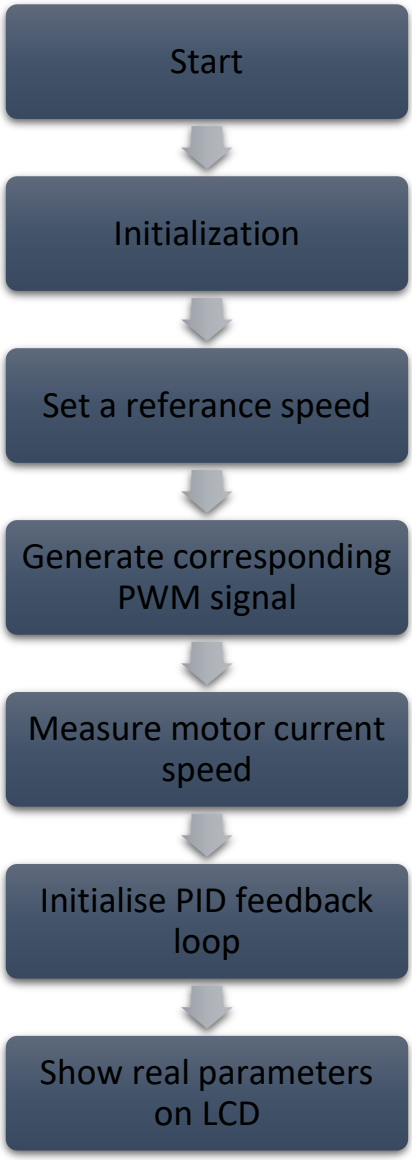

Using this set of in instructions we will get constant speed, at any load condition.

(#%& PROGRAM ^*@)

Using potentiometer

```
#include <PWM.h>
#include <LiquidCrystal.h>
LiquidCrystal lcd (3, A1, A2, A3, A4, A5);

int led = 9;
int brightness = 0;
int fadeAmount = 5;
int32_t frequency = 18000 ; //frequency (in Hz)
int softstartpin = 12;
int smoothstoppin = 5;
int POTPin = A0;
int PWMpin = 10;
int sensorValue = 0;

void setup()
{
Serial.begin(9600);
lcd.begin(20, 4);
InitTimersSafe();
bool success = SetPinFrequencySafe(led, frequency);
```

```
if (success)
{
pinMode(13, OUTPUT);
digitalWrite(13, HIGH);
}
pinMode(softstartpin, INPUT_PULLUP);
pinMode(smoothstoppin, INPUT_PULLUP);
lcd.setCursor(0, 0);
lcd.print("     WELCOME TO     ");
delay(1000);
lcd.setCursor(0, 1);
lcd.print("   DC MOTOR SPEED   ");
delay(1000);
lcd.setCursor(0, 2);
lcd.print("     CONTROLLER     ");
delay(3000);
lcd.clear();
lcd.setCursor(0, 1);
lcd.print("       PRESS       ");
lcd.setCursor(0, 2);
lcd.print(" SOFT START BUTTON ");
lcd.setCursor(0, 3);
lcd.print("      TO START      ");
```

```
while (digitalRead(12) == HIGH)
{
lcd.clear();
lcd.setCursor(0, 1);
lcd.print("    DC MOTOR IS    ");
lcd.setCursor(0, 2);
lcd.print("  STARTING SOFTLY  ");
lcd.setCursor(0, 3);
lcd.print("  UP TO 20 SECONDS  ");
int softstart_time = 20 * 1000 / 110;
for (int sp = 0; sp < 110; sp++) {
pwmWrite(PWMpin, sp);
Serial.println(sp);
delay(softstart_time);
}
lcd.clear();
}

void loop()
{
int sensorValue = analogRead(A0);
int value = map(sensorValue, 0, 1023, 0, 255);
```

```
pwmWrite(PWMpin, value);
Serial.println(value);

float dutycycle = (float)value / 255.0;
float voltage = (float)dutycycle * 230.0;
lcd.setCursor(0, 0);
lcd.print("REAL TIME PARAMETERS");
lcd.setCursor(0, 2);
lcd.print(" DUTY CYCLE =  ");
lcd.print(dutycycle * 100);
lcd.setCursor(0, 3);
lcd.print("VOLTAGE = ");
lcd.print(voltage );
if (digitalRead(5) == LOW)
{
int smoothstop_time = 15 * 1000 / value ;
for (int s = value ;  s > 0; s--) {
pwmWrite(PWMpin, s);
Serial.println(s);
delay(smoothstop_time);
}
digitalWrite(PWMpin, LOW);
while (digitalRead(4) == HIGH)
```

```
{
}
}
}
```

Using keypad

```
#include <Keypad.h>
#include <Wire.h>
#include <LiquidCrystal.h>

#define SpeedLength 3  // Give enough room for six
chars + NULL char

LiquidCrystal lcd(8, A1, A2, A3, A4, A5);

char buffer[SpeedLength]; // 6 is the number of
chars it can hold + the null char = 7
byte buffer_count = 0;
char Key;
int i, s;
int x = 0;

const byte ROWS = 4;
const byte COLS = 3;
```

```
char keys[ROWS][COLS] = {



{'1', '2', '3'},
{'4', '5', '6'},
{'7', '8', '9'},
{'*', '0', '#'}
};

byte rowPins[ROWS] = {9, 8, 7, 6,}; //connect to the row pinouts of the keypad
byte colPins[COLS] = {5, 4, 3,}; //connect to the column pinouts of the keypad

Keypad Keypad( makeKeymap(keys), rowPins, colPins, ROWS, COLS); //initialize an instance of class NewKeypad

void setup()
{
pinMode(11, OUTPUT);
pinMode(10, OUTPUT);
```

```
pinMode(12, OUTPUT);
digitalWrite(11, HIGH);
digitalWrite(12, LOW);

lcd.begin(20,4);
lcd.setCursor(0, 0);
lcd.print("  WELCOME TO ");
lcd.setCursor(0, 1);
lcd.print("  OUR PROJECT");
delay(1500);
lcd.clear();
delay(150);
lcd.print(" SPEED CONTROL ");
lcd.setCursor(0, 1);
lcd.print("  OF DC MOTOR ");
delay(1500);
lcd.clear();
}

void loop()
{
lcd.setCursor(0, 0);
lcd.print(" ENTER % SPEED ");
```

```
Key =  Keypad.getKey();
givespeed();
if (buffer_count == 3) // if the array index is equal to the number of expected chars, compare data to master
{
processdata();
}
}

void givespeed()
{
if ( Key) // makes sure a key is actually pressed, equal to (customKey != NO_KEY)
{
buffer[buffer_count] =  Key; // store char into data array
lcd.setCursor(buffer_count, 1); // move cursor to show each new char
lcd.print(buffer[buffer_count]); // print char at said cursor
buffer_count++; // increment data array by 1 to store new char, also keep track of the number of chars entered
```

```
}
}

void processdata()
{
lcd.clear();
lcd.setCursor(0, 0);
lcd.print(" YOU ENTERED ");
x = atoi(buffer);
lcd.setCursor(0, 1);
lcd.print(x);

s = map(x, 0, 100, 0, 255);
analogWrite(10, s);
delay(2000); // added 1 second delay to make sure the password is completely shown on screen before it gets cleared.
lcd.clear();
clearbuffer();
}
void clearbuffer()
{
while (buffer_count != 0)
{ // This can be used for any array size,
```

```
buffer[buffer_count--] = 0; //clear array for new
data
}
return;
}
```

SIMULATION & EXPERIMENTAL RESULTS

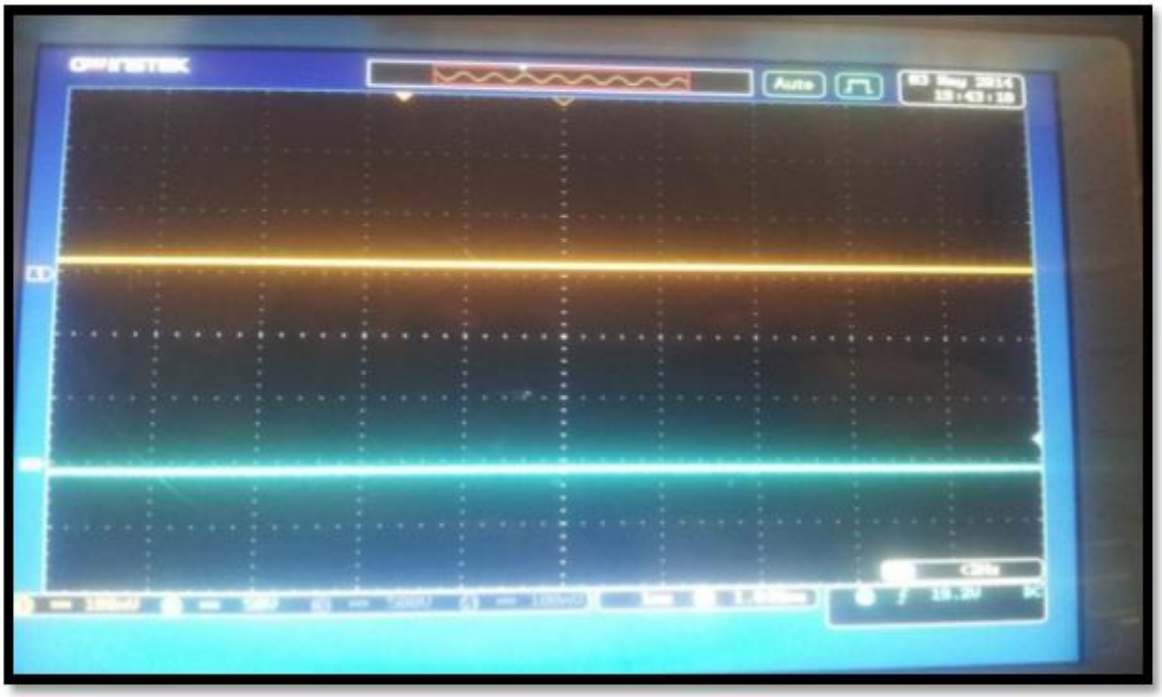

Motor current and voltage waveform at 0 rpm

Motor current and voltage waveform at 250 rpm

Motor current and voltage waveform at 750 rpm

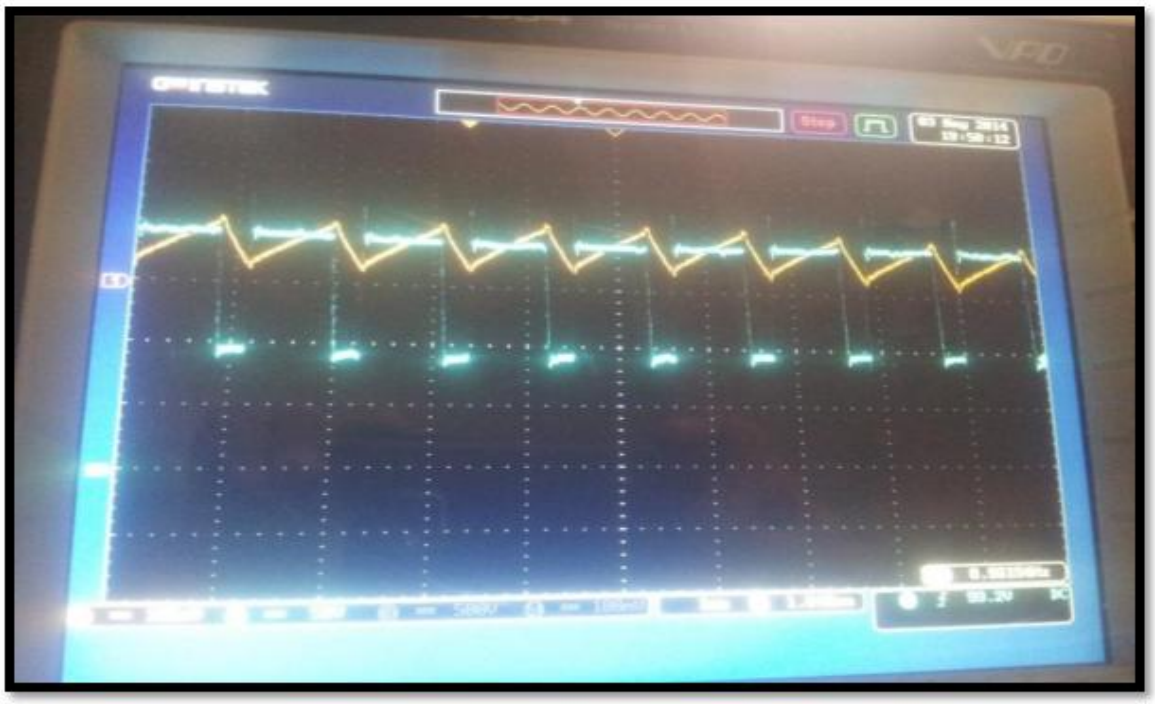

Motor current and voltage waveform at 1750 rpm

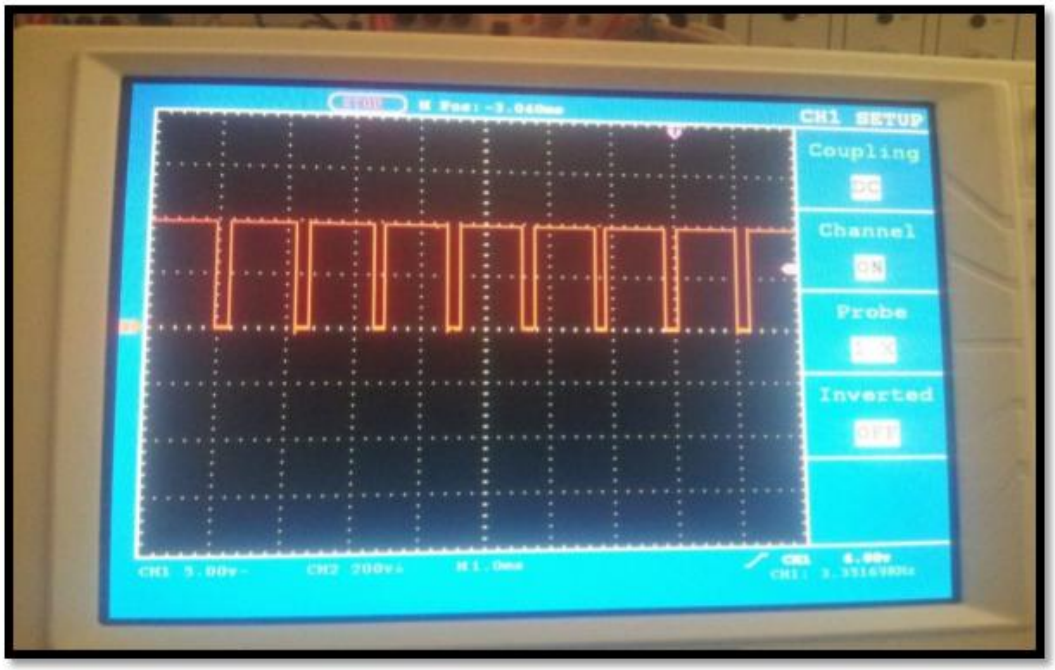

output of gate drive circuit

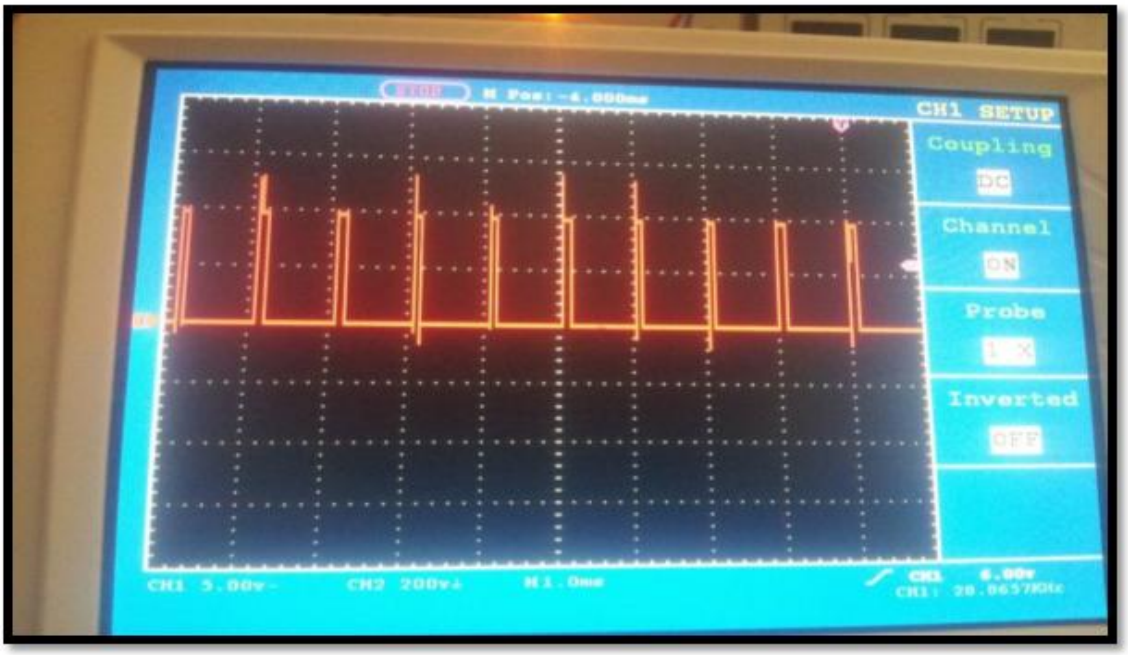

output of gate drive circuit

CONCLUSION

We have designed fixed speed control system for DC motor at any load condition which has reliability, precision and adaptability for different system. When amount of load is applied the speed does not vary and software is made according to the requirement of speed control. This designed system and implemented automatic speed control system of DC motor, it control the speed of DC motor by using PWM method. The motor voltage can be regulated from 0 V two 230 V by controlling the duty cycle of switching IGBT on and off. The lab has only one dc supply voltage 230 V which used in this project to fed dc chopper circuit. An Arduino microcontroller PWM generator has been developed and tested. The Arduino generate PWM and fed it to the IGBT gate drive circuit to control motor speed from 0 rpm to rated motor speed 2000 rpm. This control circuit is easy to implement, low cost gives smooth speed control of dc. Gate drive circuit has been developed, this IC has two function:

1) Isolate the control circuit from power circuit.
2) Amplify the PWM generated by 555 timer to trigger IGBT.

FUTURE SCOPE

1) DC motor plays a significant role in modern industries. They are widely used in industry because of its low cost, less complex control structure and wide range of speed and torque so better future of this project.
2) In this project we are used pulse width modulation technique, it is a modern technology in solid state field and it provide smooth speed control of motor.
3) Now a day PWM technique are using logic control system, so PWM method is very efficient and reliable method to control the speed of motor so it's future is also bright in the modern era.

PROJECT COST ANALYSIS

Sr.no.	Components	Cost
1	IGBT	1500
2	Arduino UNO	400
3	Inductor	1500
4	Capacitor	1300
5	Heat sink	800
6	Multimeter	800
7	Motor driver all components	500
8	Ammeter and voltmeter	400
9	2 Push buttons	75
10	LCD Display	300
11	Potentiometer	10
12	3 set of +ve and –ve terminals	90
13	Fabrication of panel and colouring	1500
14	Other miscellaneous components	1000
	Total	**= 9500**

REFERANCES

- Muhammad H. Rashid. Power Electronics Circuits, Devices and Applications. 3rd edition. United States of America: Prentice Hall. 2004.
- L, Boaz. "Microcontroller Based Industrial DC Motors Console Model Simulation in PROTEUS ISIS." International Conference on Emerging Trends in Engineering and Technology. Trabancore Engineering College, Oyoor, Kollam, Kerala, India, 2014.
- L.Boaz, S.Priyatharshini. "Atmega 328 Based Industrial Conveyor Model Simulation in PROTEUS ISIS." International Journal for Scientific Research & Development 3.2 (2015).
- P. C. Sen and M. L. MacDonald. Chopper based DC Drives with Regenerative Braking and Speed Reversal. IEEE Transactions on Energy Conversion, 1978, Vol. IECI-25, No. 4: 347-354.
- www.arduino.cc/reference
- Abu Zaharin Ahmad and Mohd Nasir Taib. A study On the DC Motor Speed Control by Using Back-EMF Voltage. AsiaSENSE SENSOR, 2003, pg. 359364
- Lawrence A. Duarte. The Microcontroller Beginner's Handbook. 2nd Edition. United States of America: Prompt Publication. 3-5; 1998.

THANK YOU!